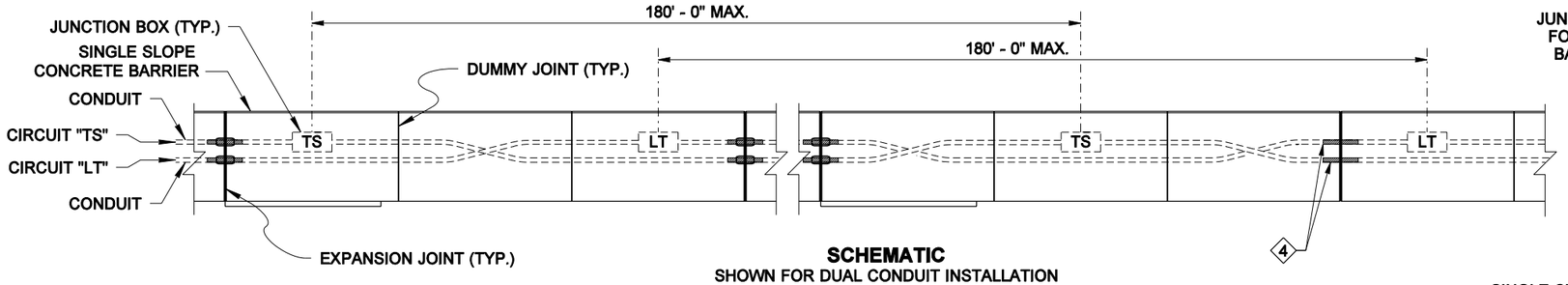

SCHEMATIC
SHOWN FOR DUAL CONDUIT INSTALLATION
~ CIRCUIT TYPES MAY VARY

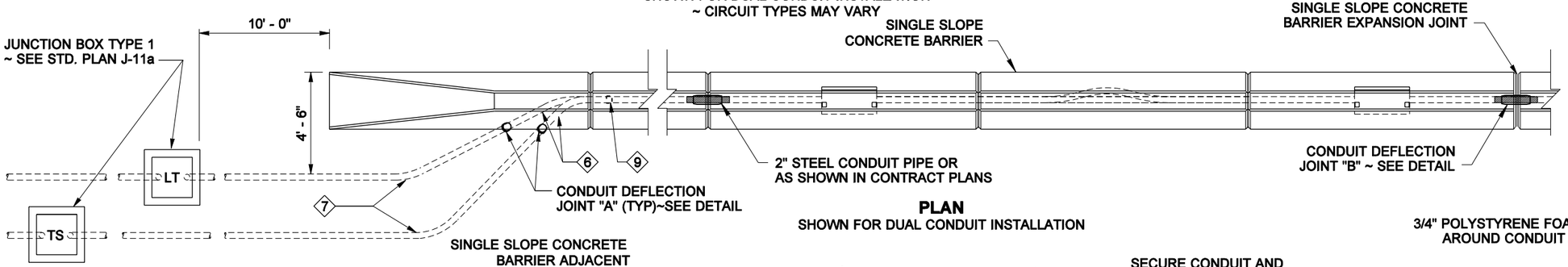

PLAN
SHOWN FOR DUAL CONDUIT INSTALLATION

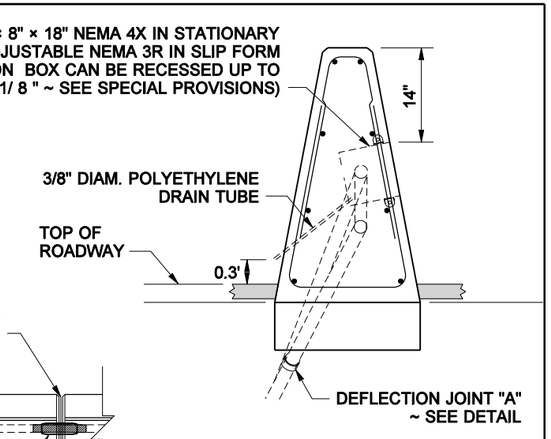

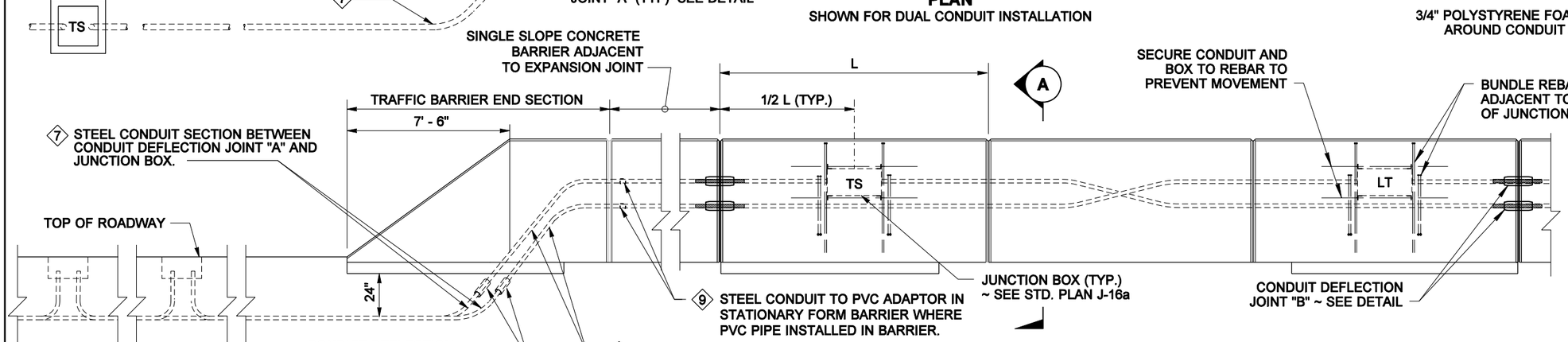

ELEVATION
SHOWN FOR DUAL CONDUIT INSTALLATION

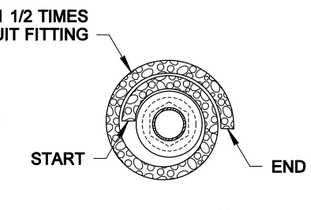

KEY NOTES

1. Conduit fitting with internal bonding jumper ~ Type DX for deflection of 30° and ¾" movement.
2. Where steel conduit exits from a structure wrap conduit pipe for 1' - 0" on each side from the exiting point. Pipe-wrap tape shall be 2" wide, 20 mil thick, and installed with a minimum of 1" overlap.
3. 1' - 0" long, ¾" thick expanded polystyrene foam sleeve around conduit and conduit fitting. After placing wire ties, duct tape seams and ends to seal and prevent concrete from bonding with fitting and conduit.
4. Where conduit in a structure is routed across a cold joint with continuous reinforcing steel, installed for the contractors convenience, install ¾ inch premolded joint filler and wrap conduit pipe for 1' - 0" on each side of joint. Pipe-wrap tape shall be 2" wide, 20 mil thick, and installed with a minimum of 1" overlap.
5. See Single Slope Concrete Barrier Standard Plan C-14a for additional details.

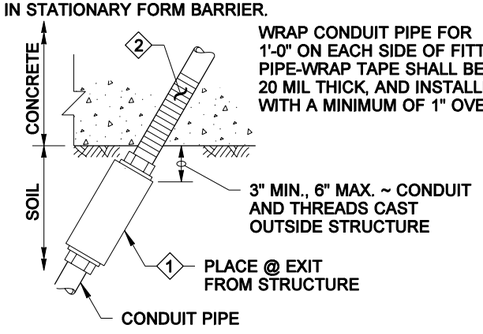

CONDUIT DEFLECTION JOINT "A" DETAIL

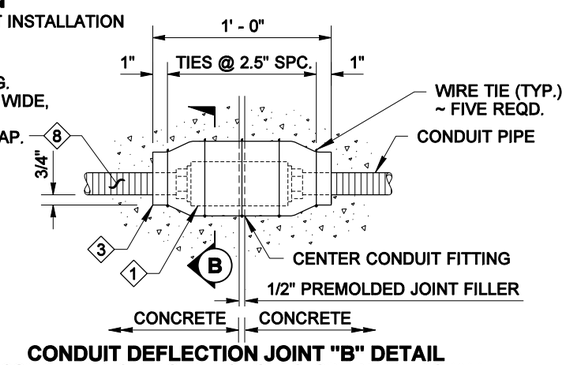

CONDUIT DEFLECTION JOINT "B" DETAIL
CONDUIT PIPES PLACED IN SINGLE SLOPE BARRIER SHALL BE FITTED WITH DEFLECTION FITTINGS AT EXPANSION JOINTS

CONDUIT INSTALLATION IN SINGLE SLOPE CONCRETE BARRIER (DUAL FACE)

FILE NAME	S:\414126\Electrical\MASTER_FILES\DETAILS Homepage\single slope sht.dgn						
TIME	7:43:44 AM			REGION NO.	STATE	FED.AID PROJ.NO.	
DATE	4/26/2006			10	WASH		
PLOTTED BY	trinhha			JOB NUMBER			
DESIGNED BY							
ENTERED BY							
CHECKED BY		EDIT KEY NOTE 4	4-24-06	JH	CONTRACT NO.	LOCATION NO.	
PROJ. ENGR.		NEW DETAIL	3-21-06	JH			
REGIONAL ADM.		REVISION	DATE	BY			

P.E. STAMP BOX DATE

P.E. STAMP BOX DATE

Washington State Department of Transportation

SINGLE SLOPE CONCRETE BARRIER ENGLISH

SINGLE SLOPE

PLOT1

1.05E

SHEET OF SHEETS